Jsky LED
By Sky Energy

THE POWER
OF OUR FUTURE

LED T8 TUBE LAMP
HIGH STANDARD

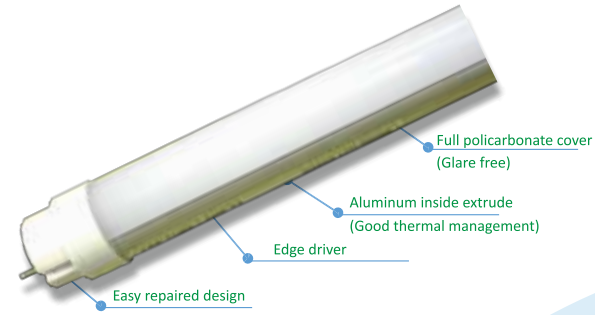

SPECIFICATION	LED TUBE LAMP (T8 Type)	
Model Name	GJAT86IS	GJAT86IS_US
Power	16 W	
Efficiancy (Lumen/Watt)	106 lm/ Watt (typ)	120 lm/ Watt (typ)
Total Luminous Flux	1,600 lm (Typ)	1,900 lm (Typ)
Design life Time	40.000 Hours	
Driver Protection	Isolated	
Input Voltage	200 - 240 V (AC) 50/60 Hz	170 - 240 V (AC) 50/60 Hz
AC Input Type	Single side AC input with G13 base	Single side AC input
Power Factor	0.95 (Typ)	
Colour Temperature	6500 K (Typ)	
Operating Temp.	0 ~ 40°C	
Operating Humidity	10 ~ 80% RH	
Storage Temperature	-10 ~ 50°C	
Storage Humidity	5 ~ 90% RH	
CRI / Beam Angle	> 80 / 120°	
Dimension / weight	Diameter : 26 mm, Length : 1200 mm / < 500 gram	
Housing	Polycarbonate with External aluminum extrusion bar for cooling	
Diffuser	Hight transmittance / efficient PC diffuser	
Waranty Time	2 Years	

SIZE PARAMETER	4 FT TUBE (1200mm)	
	Minimum	Maximum
A (Base face to base face)		1199.4
B (Base face to end of opposite pin)	1204.1	1206.5
C (End of pin to end of opposite pin)		1213.6
D (Bulb, Outside diameter)		28.0

Intensity (Polar Distribution)

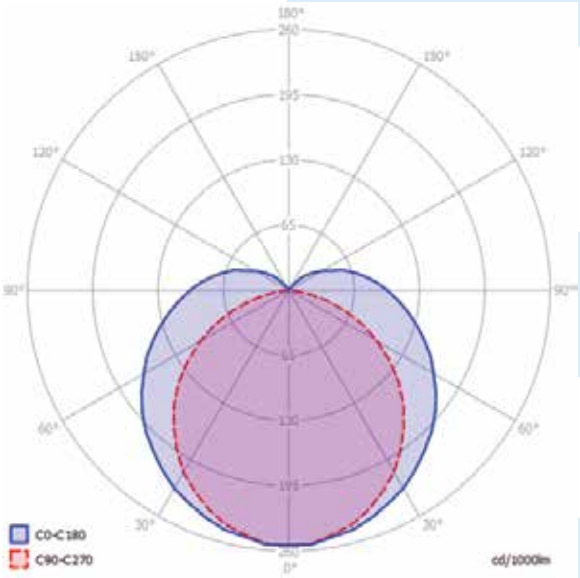

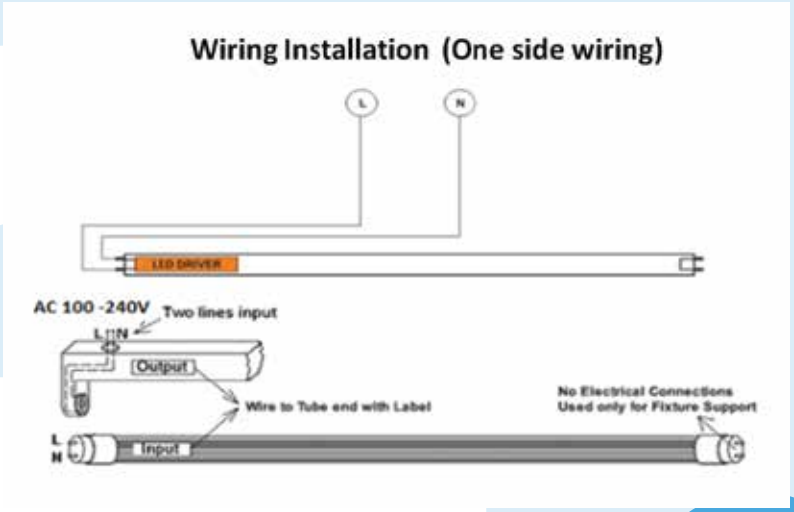

LED T8 TUBE LAMP *HIGH STANDARD*

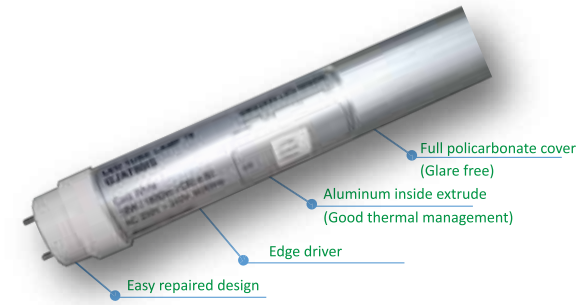

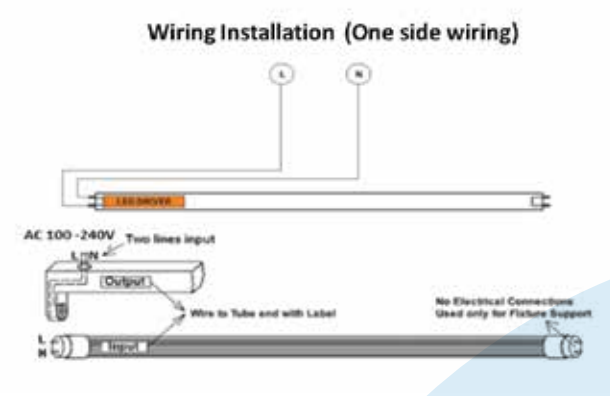

SPECIFICATION	LED TUBE LAMP (T8 Type)
Model Name	GJAT88IS
Power	18 W
Efficiancy (Lumen/Watt)	100 lm/ Watt (typ)
Total Luminous Flux	1,800 lm (Typ)
Design life Time	40.000 Hours
Driver Protection	Isolated
Input Voltage	200 - 240 V (AC) 50/60 Hz
AC Input Type	Single side AC input with G13 base
Power Factor	0.95 (Typ)
Colour Temperature	6500 K (Typ)
Operating Temp.	0 ~ 40°C
Operating Humidity	10 ~ 80% RH
Storage Temperature	-10 ~ 50°C
Storage Humidity	5 ~ 90% RH
CRI / Beam Angle	> 80 / 120°
Dimension / weight	Diameter : 26 mm, Length : 1200 mm / < 500 gram
Housing	Polycarbonate with External aluminum extrusion bar for cooling
Diffuser	Hight transmittance / efficient PC diffuser
Waranty Time	2 Years

SIZE PARAMETER	4 FT TUBE (1200mm)	
	Minimum	Maximum
A (Base face to base face)		1199.4
B (Base face to end of opposite pin)	1204.1	1206.5
C (End of pin to end of opposite pin)		1213.6
D (Bulb, Outside diameter)		28.0
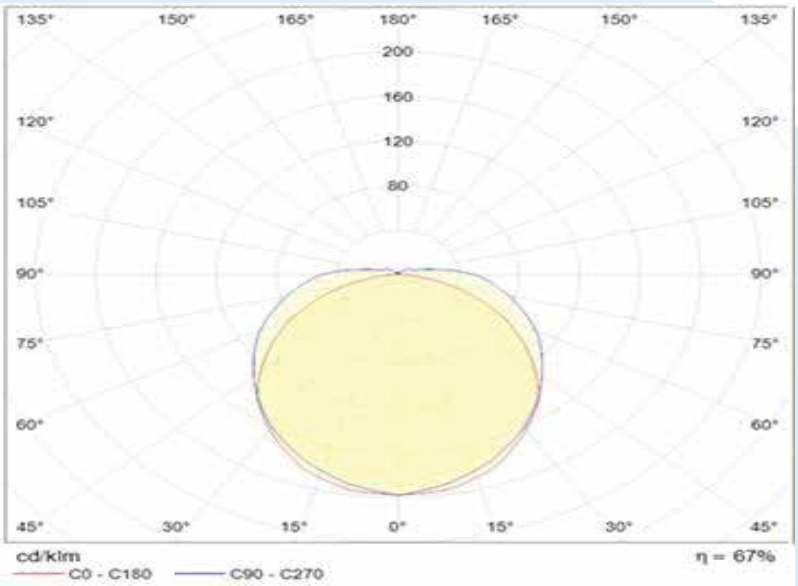
Intensity (Polar Distribution)